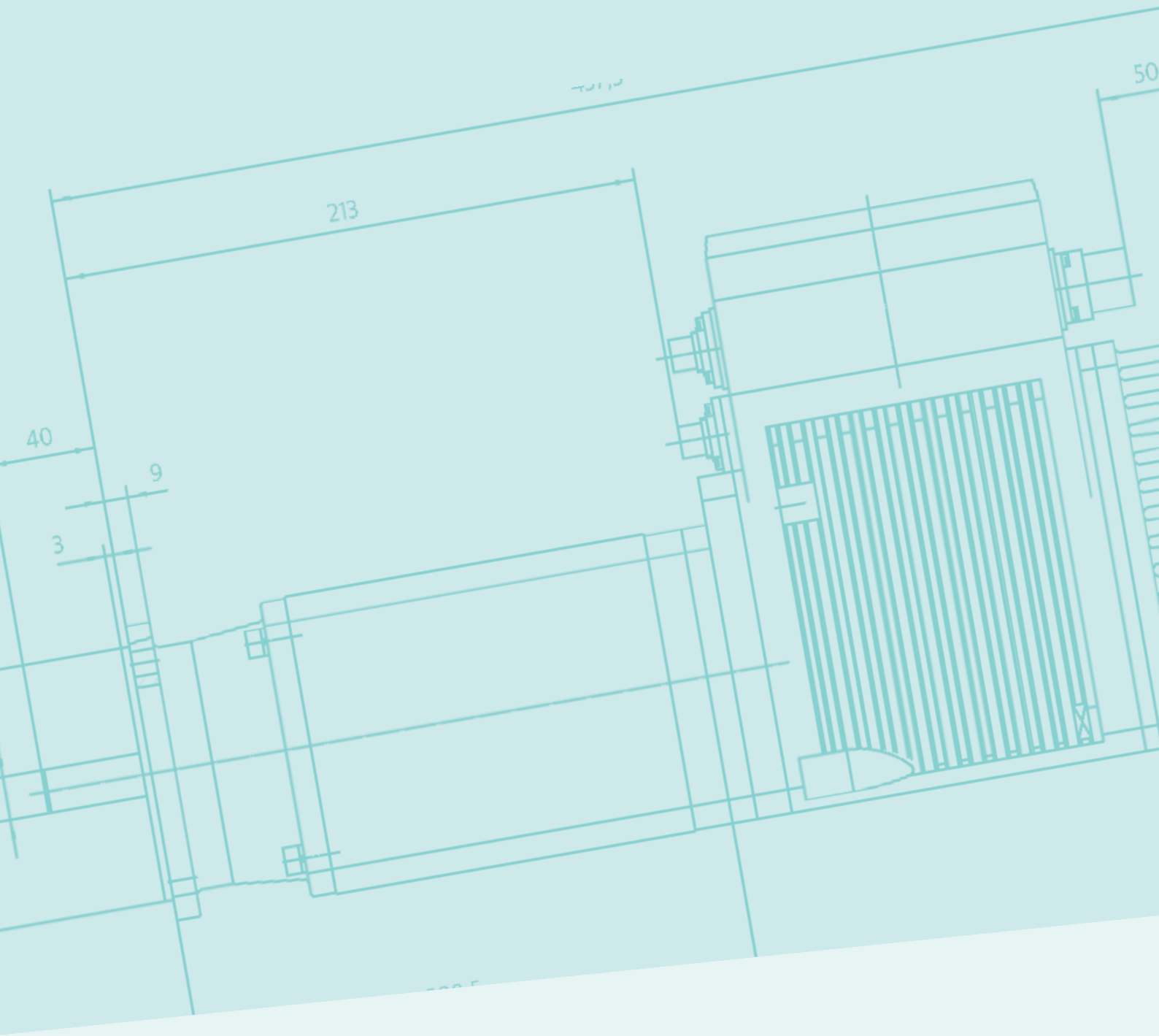

>> COMPACT POWER PACKS WITHOUT FAIL

GFC servo drives convince by precise positioning and high dynamics. In the Milan drive advanced, motor and electronic controls are firmly connected as unit which considerably facilitates assembly, commissioning and maintenance. The high enclosure protection IP 64, optionally IP 67, also allows the use in extremely harsh conditions.

The electronically commutated motor Milan Format with integral gearing provides outstanding performance as well as new constructional options due to its compact design. Due to the high holding torque when not connected to the mains, a brake is rarely required.

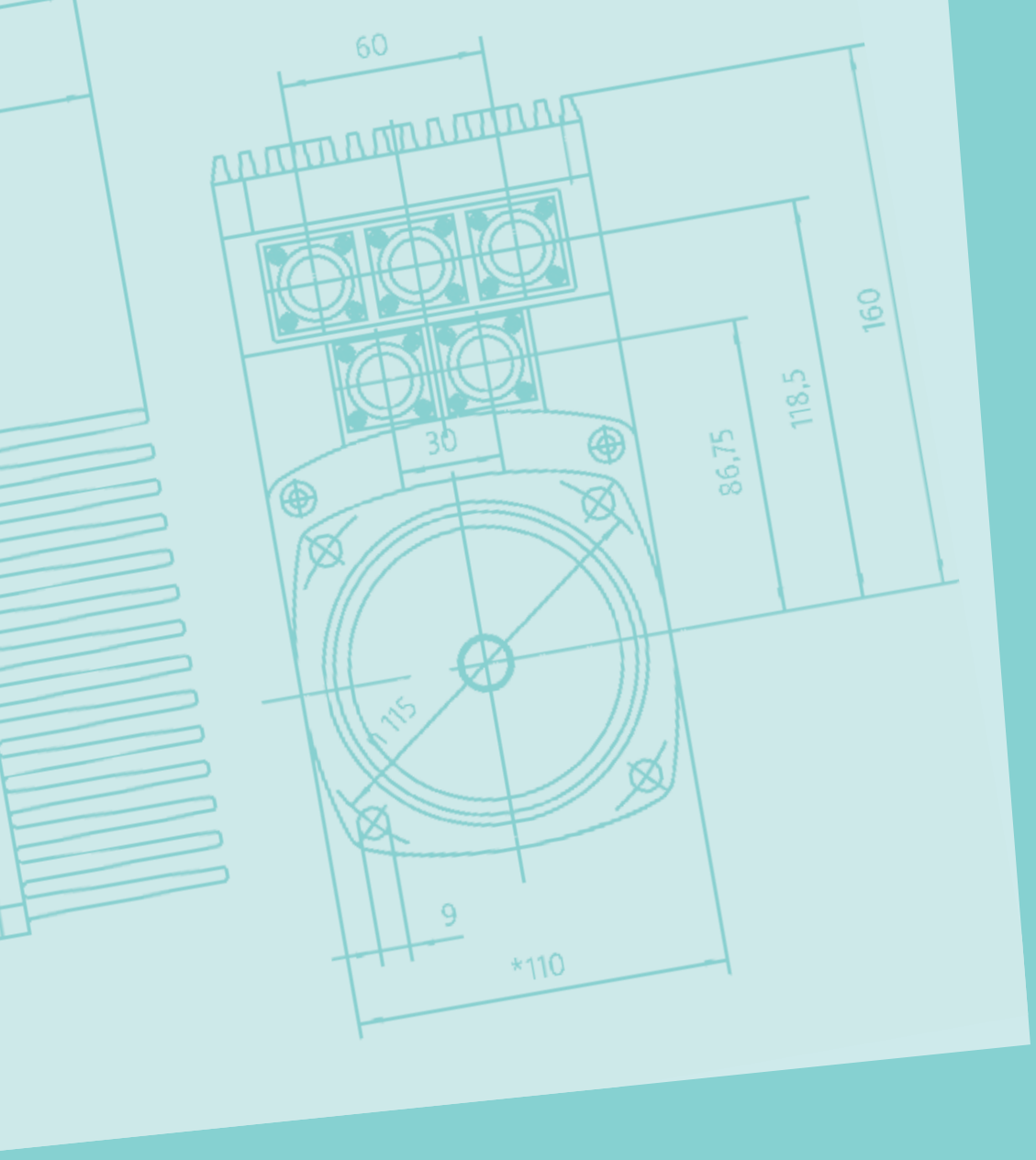

GFC

11

Servo actuators

Milan drive advanced

Control Types	Possible applications
Output speed/speed/contouring error	Conveyor belts, centrifugal chambers, stems,...
Torque/force	Capping machinery, presses,...
Absolute/retelative Position	Textile, packaging, handling machines
Modulo position	C axis on working lathes, stem orientation, indexing tables,...

The Milan drive advanced can be used anywhere where a high positioning accuracy is required with simultaneously high dynamics. The nominal torque for the largest installation size amounts to 4 Nm; the max. rotation output for the installation size MDA 35.1 is 6 000 1/min.
The high protection class IP 64 (optional: IP 67) also enables use under rough ambient conditions.
The Milan drive advanced can be used i.e. in the following devices:

>> in textile machines
>> in packaging machines
>> for »Pick and Place«
>> in wood-processing machines
>> in medical engineering
>> in food-processing machines
>> for centering actuators
>> in mounting machines
>> in presses
>> in printing machines
>> in security engineering
>> for handling functions
>> in custom mechanical engineering
>> in conveyance engineering
>> in wine-cellar machines
>> in rotary indexing tables

Milan drive advanced – Benefits

Benefits of integrated controls

The Milan drive advanced contains (as one of few servo actuators) all components necessary for its operation in a single housing. After the connection of the voltage supply (230 V AC) and the data line, the device is immediately ready to operate – plug and play.

Benefits in planning

- High functionality and flexibility simplify the involvement of planning in the process
- Uniformly calculable costs
- Simple integration into field-bus systems possible
- Internal supply for electronics available
- Optimum calibration of the motor and electronics is ensured by the manufacturer
- Warranty backed up by a single source

Benefits in the installation

- Savings of time and material, since fewer components must be installed
- One can omit cooling measures in the switching cabinet, since lost output only occurs directly on the actuator
- Motor and electronics are mutually calibrated to the optimum extent
- External sensors can be connected directly to the Milan drive advanced and supplied by this device
- EMC compliance warranted

Benefits in the commissioning

- Connection-ready actuator with controls: connect, power on and the device is ready to use
- Diverse and simple adaptation options to suit prevailing process conditions
- Simple parameterization via the RS 232 interface with the aid of the parameterization software »MDAwin«
- Every Milan drive advanced is subjected to comprehensive functional tests in the plant.

Benefits in operation

- Programming options enable adaptation to the existing control technology – and if required, to new operating conditions
- High dynamics due to short scanning time
- High protection class and high level of corrosion protection
- In a design basis event (DBE), the Milan drive advanced can be quickly and completely replaced; operational failures are there by minimized
- Password functions protect against unauthorized access

Size MDA 35.1 – MDA 63.1
axial design

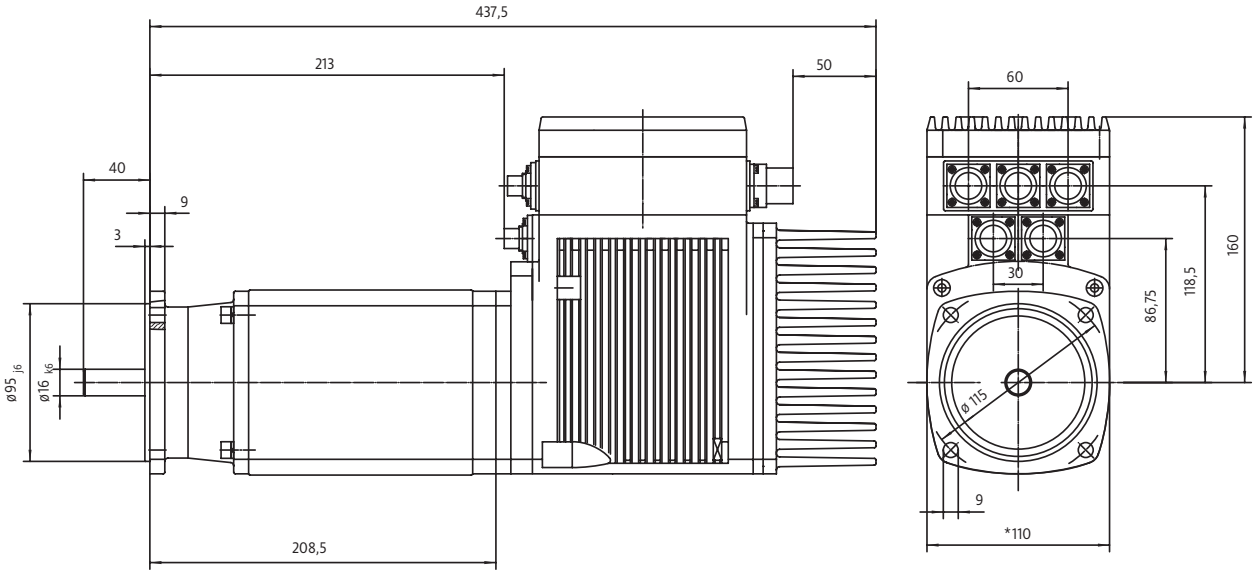

Size MDA 35.1 – MDA 63.1
angular design

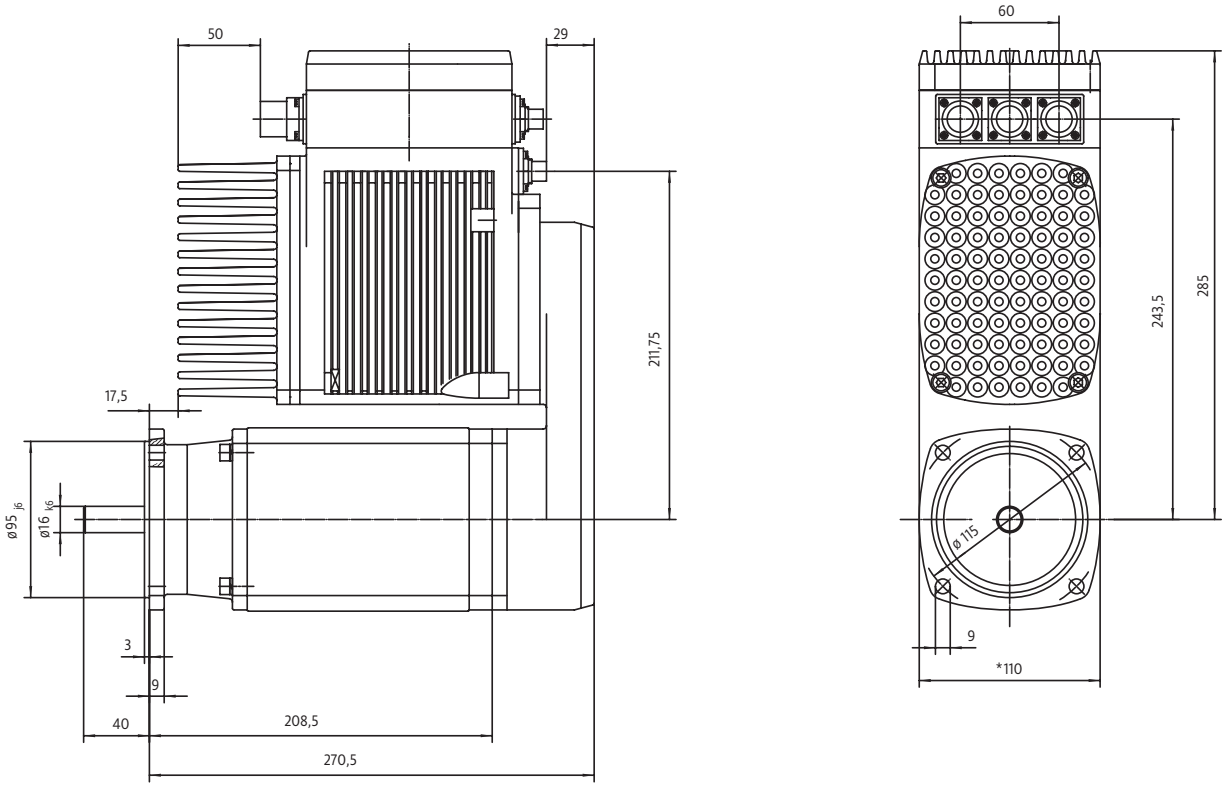

Position of plugs can be varied for both models.

Functions/Equipment Overview

Equipment	AC-synchronized servo motor	☐
	Special designs	▲
	Holding brake	▲
	- Brake management	▲
	Position-transmitter system	
	- Resolver	☐
	- Multi-turn absolute-value transmitter	▲
	Servo amplifier	☐
	Digital position and rotation output controller (current vector controller)	☐
	- 4 regulatory parameter records	☐
	Power supply unit (voltage supply: 230 VAC)	☐
	Field bus interface, i.e.	
	- PROFIBUS DP interface (Profidrive)	▲
	- CANopen interface (CiA 402)	▲
	4 freely customizable digital inputs	☐
	- Supply to sensors on the digital inputs	☐
	A bipolar analog input (-10V to +10V)	☐
	4 freely customizable digital outputs	☐
	RS 232 customizable interface	☐
	Flange according to DIN 42948	☐
	Motor shaft according to DIN 748	☐
	- Parallel-key nut	▲
	Protection class IP 64	☐
	Protection class IP 67	▲
	Explosion protection	▲
Functions - Programming	Customizable/Parameterization	
	- RS 232 Interface	☐
	- Via field bus interface	▲
	- Customizable/Parameterization software MDAwin	▲
	- Program/configuration externally storable	☐
	SPS Functional components	▲
	Reference operation management	☐
	Position control	☐
	Manual operation (type-operation data records)	☐
	99 freely customizable operation data records	☐
	- Single-step operation	☐
	- Loops/lineages	☐
	- Acceleration/deceleration, linear or sin²	☐
	- Teach-in	☐
	Various rule types	
	- Rotation output/speed	☐
	- Contouring error	☐
	- Torque/force	☐
	- Position (absolute, relative or modulo)	☐
	Technological functions, i.e.:	
	- Electronic gearbox (synchronized run)	▲
	- Flying saw	▲
Signals Diagnostics	Monitoring, i.e.	
	- Temperature/ actuator blocked	☐
	- DC-link circuit	☐
	- Event recorder	☐
	- Operating-hours counter	☐
Fixtures	Electronic name plate	☐
	Standard-sized cables	▲
	Attached gearbox	▲
	Control box	▲

☐ **Standard** ▲ Option

Field bus interface (optional) – PROFIBUS DP (Profidrive) or CANopen

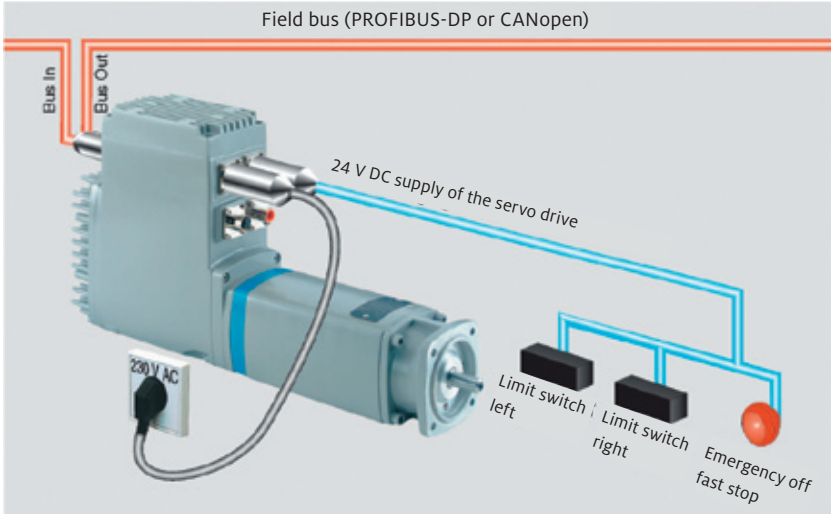

The Milan drive advanced is available with a PROFIBUS DP interface according to the Profidrive protocol configured to suit actuators featuring changeable rotation output – or with a CANopen Interface according to CiA 402. Additional field bus interfaces are available by request. The max. transmission rate for the PROFIBUS DP Interface amounts to 12 Ambit/s; with CANopen, the Milan drive advanced facilitates max. 1 Ambit/s. For the galvanically separated field bus interfaces, two separate M12 round plugs (Bus In und Bus Out) are available on the Milan drive advanced. A potential bus termination occurs via an external termination resistance in M12 plug technology.

Inputs and outputs, digital und analog

The Milan drive advanced features inputs via which non-field-bus-capable sensors can be connected – and outputs to which other devices (i.e., a display device can be connected. All inputs and outputs are freely customizable and can be assigned to individual operation data records.

Inputs/outputs	Description	Sample configuration
4 freely customizable digital inputs	24 V DC galvanically isolated	>> Reference switch >> End switch Plus >> End switch Minus >> Quick stop
1 analog input	bipolar, -10 V to +10 V	>> Potentiometer for pre-definition of Rotation-speed target value, Torque target value, max. rotation output or max. torque
4 freely customizable digital outputs	>> 1 relay output 30 V DC/1 A >> 3 Optocoupler 30 V DC/10 mA	>> Target value attained >> Operation data record will be processed >> Fault >> Holding brake

Property		Note
Ambient temperature	- 10° C to + 50° C	To be stored at a temperature range from: - 20° C bis + 70° C
Protection class	IP 64 IP 67 (optional) Explosion protection ATEX II 3D (optional)	
Cooling	Free convection with fan, internal control (optional)	
Electrical connection	Machine plug M23/Device plug M12 Terminal connection (optional)	
Cable sets	Standard-sized cable sets for individual actuators and Bus mains	See fixtures
Shaft design	Without nut With nut (optional)	Dimensions: See dimensions sheet
Attachable gearbox (optional)	Various types by request	Planetary gear, bevel gear, worm gear and others
Position transmitter	Resolver Absolute-value transmitter (optional)	Resolution 4096 Inc/U Multiturn (4096 U*4096 Inc/U)
Controller	Digital, scanning time 100 µs	
Operation modes	- Torque control - Rotation output control - Position control (absolute, relative, modulo) - Contouring error	
Technological functions	By request	
Configuration	- Via serial interface RS232 - Via field bus	115 kBit/s, binary protocol, backed up by CRC
Operation data	99 Operation data records	A single operation data record contains the operation mode, target values and limit values
Digital inputs [1)]	4, freely customizable	24 V DC, galvanically isolated, Low: 0 bis 5 V, High: 15 bis 30 V
Digital outputs [1)]	4, freely customizable (*if holding brake and/or fan, one output less for each)	Output 1: relay, closing, max 30 V DC/1 A Output 2 – 4: Optocoupler, max. 30 V DC/ 10 mA
Analog inputs (optional)	1, freely customizable	Input range - 10 V bis + 10 V
Analog outputs (optional)	By request	
Voltage output	24 V DC, Max. 150 mA	i.e., for the supply of end switches, digital inputs – or the display of outputs
Field bus (optional)	- Profibus DP, Profile Profidrive V2.0 - CANopen CiA 402	Galvanically isolated, max. 12 Mbit Galvanically isolated, max. 1 Mbit
Functional components for SPS	Various functional components by request	
Status	25 signals 9 warnings + collective warning 17 faults + collective fault	Display via control program, field bus or digital outputs

Sizes MDA 35.1 – MDA 63.1

The Milan drive advanced is available in 3 standard sizes. Other sizes on request. The servo drives' outstanding feature is their compact design in all sizes.

	Size	MDA35.1	MDA56.1	MDA63.1
Output data	Nominal speed n_N (U/min)	3000/6000	3000	3000
	Nominal power P_N [1] (kW)	0,47/0,47	0,78	1,26
	Nominal torque M_N [1] (Nm)	1,5/0,7	2,5	4,0
	Maximum torque M_{MAX} (Nm)	4,0/2,5	7,0	9,0
	Maximum speed n_{MAX} (U/min)	4000/6000	4000	4000
	Rotor inertia J (kg m^2)	$0,7^{-4}/0,7^{-4}$	$2,5^{-4}$	$7,0^{-4}$
Electrical data	Power supply for drive	230 V AC (-10 %/+15 %), 50 Hz		
	Nominal current I_N for drive	6,0/6,0	8,0	11,0
	Maximum current consumption I_{MAX} (A) for drive	12,0/12,0	22,0	22,0
	Fuse (external) for drive : Nominal current – characteristics	10A - K	16A - K	16A - K
	Electronics power supply	internal, 24 V DC of intermediate circuit, automatic switching to 24 V DC (– 10 %/ + 10 %) external in case of supply voltage failure		
	Electronics current consumption [2] typically (mA)	250		
Holding brake (Option)	Holding torque, statical (Nm)	2,0/2,0	4,5	9,0
	Holding brake power supply	24 V DC (-8 %/+ 8 %)		
	Current consumption (A)	0,46/0,46	0,5	0,75
Fan (Option)	Fan power supply	24 V DC (-8 %/+ 8 %)		
	Current consumption (A)	1,00/1,00	1,00	1,00
Ballast	Ballast power with internal ballast resistance [4] (W)	50		
	Ballast power with external ballast resistance [1] (W)	Option: 100/200/400		
Weight	axial design without holding brake (kg)	6,3/6,3	9,3	11,2
	with holding brake (kg)	6,6/6,6	9,9	11,7
	angular design without holding brake (kg)	6,6/6,6	10,2	12,0
	with holding brake (kg)	6,9/6,9	10,7	12,5
Dimensions axial design	max. Length without/with holding brake (mm)	365,0/383,0	423,5/448,5	437,5/437,5
	Height (mm)	157,5	160	160
	Width (mm)	75	110	110
	Weight without/with holding brake (kg)	6,3/6,6	9,3/9,9	11,2/11,7
Dimensions angular design	max. Length without/with holding brake (mm)	229,0/247,0	245,0/270,0	257,0/257,0
	Hight from axis centre (mm)	242,5	285	285
	Width (mm)	75	110	100
	Weight without/with holding brake (kg)	6,6/6,9	10,2/10,7	12,0/12,5

1) In S1 operation
2) Standard version
3) Indication for S1 operation,
4) Weight for standard version

Holding brake (optional)

If a holding brake is used, the current position is reliably maintained. This prevents a change of position (i. e., by the exertion of gravity or other outside forces) after shutting off the motor.

Static holding-torque values:	MDA 35.1	2,0 Nm
	MDA 56.1	4,5 Nm
	MDA 53.1	9,0 Nm

Brake management

Via the internal brake management system, the brake is involved in accordingly targeted program procedures. The linkage and separation times for the brake and any pre-defined wait and position-control holding intervals are automatically included (see graphic).

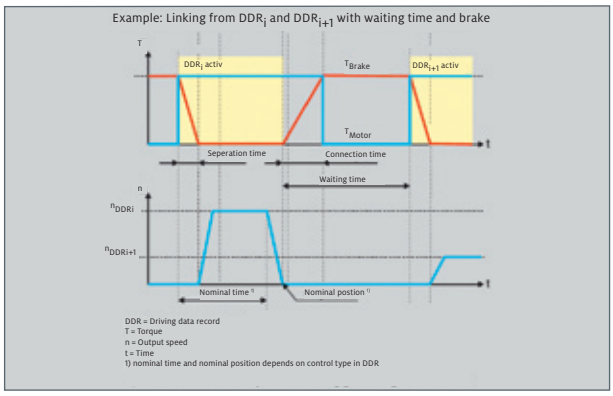

FDS = Operation data record, T = Torque, n = Rotation output, t = Time, 1) Target time or target position nor controlled in the FDS

As long as the brake is not completely open or closed, the motor generates the hold torque. The waiting time can be (for each operation run data record) separately set and denotes the min. wait until the next operation run. In this waiting time, the separation and linkage times for the brake are included. If the sum of the separation and linkage time is longer than the set waiting time, the brake is not used.

Customer-specific technological functions

Additional functions

Upon request – in addition to the aforementioned functions – additional application-specific functions are realizable (such as i. e., flying referencing – or an override functionality).

Programming – Parameterization

Programming – Parameterization

The parameterization and/or programming of operation data records occurs with the aid of a desktop or laptop PC connected to the RS 232 Interface. The RS 232 Interface lies on a separate plug so that it can be accessed without disconnecting the other connections.
The PROFIBUS profile PROFIDRIVE and CANopen CiA 402 also encompass (in addition to the actual programming) the option to switch parameters. Parameterization and programming can therefore take place from the superordinate controls. For the parameterization via the RS 232 interface, the software MDAwin is needed and can be procured from GFC AntriebsSysteme. Operation also requires the Microsoft operation system Windows 2000/XP. The procedure program and/or the configuration of any Milan drive advanced are respectively storable on a data medium (i. e., the hard drive of a laptop) and can be modified offline. If a Milan drive advanced is replaced, the saved configuration can simply be loaded to the programming device and then be transferred to the operation of the replacement actuator.

SPS Functional components

The quick and simple commissioning of the Milan Servo actuator is enabled by way of a pool of Milan functional componentsn[1)] based on the Simatic software Step7 in association with PROFIBUS DP. The SPS programmer does not have to deal with the detailed requirements of the PROFIBUS protocol (Profidrive) concerning the activation. By combining the various components, nearly any application situation can be realized.
1) The functional components must be adapted by the programmer of the given application.

Functions

Reference operation management

The reference operation can be initiated by:
>> Applying voltage (Powerup)
>> First start of an operation data record
>> Reference operation by an external signal, i.e., by a digital input or via field bus
>> Manually via the MDAwin software

Reference operation speed/rotation output and reference operation torque/force can be determined.

Position control

Positioning takes place internally, via a P-controller. The proportional increase depends on the system to be controlled. There are four independently-adjustable control-parameter sets available for possible assignment to individual operation data records.
The likewise adjustable position control hold time indicates how long the actuator (after the end of a program) maintains a required control-torque level to counteract a change in the target position compelled by the influence of external forces. The position control hold time is adjustable between 0 and ∞.

Manual operation

Via two separate typing-operation data records, the actuator can (independent of the motion profile set as a parameter) be operated in the »manual operation mode«. The two typing-operation data records can be directly activated via a field bus.

Customizable Operation data records

The Milan drive advanced features more than 100 freely customizable data records. These operation data records can be activated via field bus. The following settings are possible:
>> Selection from various controller modes (see below)
>> Rotation output/speed
>> Torque/force
>> Acceleration
>> Acceleration ramp, linear or sin²
>> Deceleration
>> Deceleration ramp, linear or sin²

Single-step operation

The operation data records are activated individually by a start signal – via the bus, via the RS 232 Interface or via a digital input.

Procedure control
Each operation data record can in turn activate another to enable the programming of infinite loops. Between two operation data records, a wait time can be defined. Via an external signal, lineages are possible. As soon as this signal is pending, the actuator jumps to the programmed operation data record and performs the action defined therein. As an additional option, the program procedure can be halted according to any operation data record and then only continued by an external synchronization signal.

Teach In
Teach In means the capability to assign actual positions as target values to certain operation data records. Externally-preset motion sequences can thereby be mapped in a procedure program.

Signals/Diagnostics/Fixtures

Monitoring

The Milan drive advanced features comprehensive monitoring functions and status signals. As a rule, the differentiation is made between a fault (which leads to the immediate shutoff of the actuator) and a warning (which merely generates a signal). A warning must often bee seen as the precursor to a fault.

Immediate shutoff in the event of a fault prevents damage to the machine or to the installation. The diverse options available for diagnostics enable the quick localization and remedy of a fault. For control via field bus: all fault and warning signals can be transmitted separately.

Warnings
Examples
>> DC-link circuit less than 220 V
>> Brake voltage less than 22 V or greater than 26 V
>> Motor temperature greater than 130 °C
>> Electronics temperature greater than 70 °C
>> Contouring error

Faults
>> DC-link circuit less than 180 V or greater than 400 V
>> Brake voltage less than 20 V or greater than 28 V
>> Motor temperature greater than 140 °C
>> Electronics temperature greater than 75 °C
>> Quick-hold command activated
>> Actuator blocked

Event memory
The Milan Drive Advanced features an event memory in which i. e., faults, warnings and other functional events are stored chronologically. The data are stored on non-volatile memory media.

Operating hours counter
The Milan drive advanced features an internal operating hours counter. The data are stored on non-volatile memory media.

Electronic name plate

In the Milan drive advanced, a non-volatile device identifier is lodged. At GFC AntriebsSysteme, all product-identifying information (such as i. e., order number, circuit diagram, Firmware version, etc.) is retrievable.

In two ID fields, customer-specific data can also be entered.

Use conditions/EU directives

Use conditions

Protection classes
>> IP 64 means protection against the ingress of dust and spray water
>> IP 67 means protection against the ingress of dust and protection when immersed in water

Corrosion protection
The housing of the Milan drive advanced is manufactured from a top-quality corrosion-resistant aluminum alloy. All other outlying parts such as screws and the motor shaft are made of non-corroding steel. The top coat is gray – other colors are available upon request.

Ambient temperatures
– 10°C bis + 50°C
Derating from + 25°C. Reduction of the nominal output by 2.5% per Kelvin.

Explosion safety (optional)
The Milan drive advanced can be used in explosion-prone atmospheres under conditions which must be precisely verified. GFC affirms in a manufacturer`s statement the fulfillment of the conditions for the following ATEX device classification:

Device group II,
Device category 3,
Medium dust (Zone 22),
Temperature class T4 (135°C)

EU directives

Machine Directive
Servo actuators are not (according to this directive) complete machines. That means that a compliance verification is not possible; however, GFC AntriebsSysteme affirms in a manufacturer's statement that the norms specified in the Machine Directive have been observed in the design of the Milan drive advanced. By way of the assembly with other components, a »machine« can be created which fulfils the conditions set forth in this directive. Prior to the commissioning of this machine, a compliance certificate must be issued by its manufacturer.

Low-voltage and EMC directive
The fulfillment of these requirements by the Milan drive advanced was verified in tests. Therefore, GFC AntriebsSysteme provides a compliance statement in accordance with these directives.

Since the Milan drive advanced fulfils the relevant requirements set forth by the low-voltage and EMC directives, the devices are labeled with the CE symbol according to the labeling requirement.

Fixtures

Standard-sized cables

Output as well as signal lines can be supplied pre-sized in different lengths. You will find further information in the fixtures catalog.

Attached gearbox
Upon request, the Milan drive advanced can also be supplied with an attached gearbox. The gearbox can either be procured from GFC AntriebsSysteme or provided by the customer. The gearbox transmission ratios are taken into account in the Milan drive advanced configuration menu.

Control box
The Milan drive advanced, the control box, standard-size lines and the MDAwin Software can be provided to interested users on loan for test purposes. On the control box, inputs and outputs can be directly activated. Alternatively, external sensors (such as end switches or reference switches) can be connected directly on the control box.

Documentation
This documentation consists of:
>> Operation guide for the corresponding controls type (PROFIBUS DP, CANopen)
>> Technical Data Sheet and dimensions sheet are available in series, in German and English language versions. Other languages upon request.

For information on other available fixtures, please refer to the separate fixtures catalog.

Dimension sheets Milan format
Size MF 35.1 – MF 63.1

Milan format

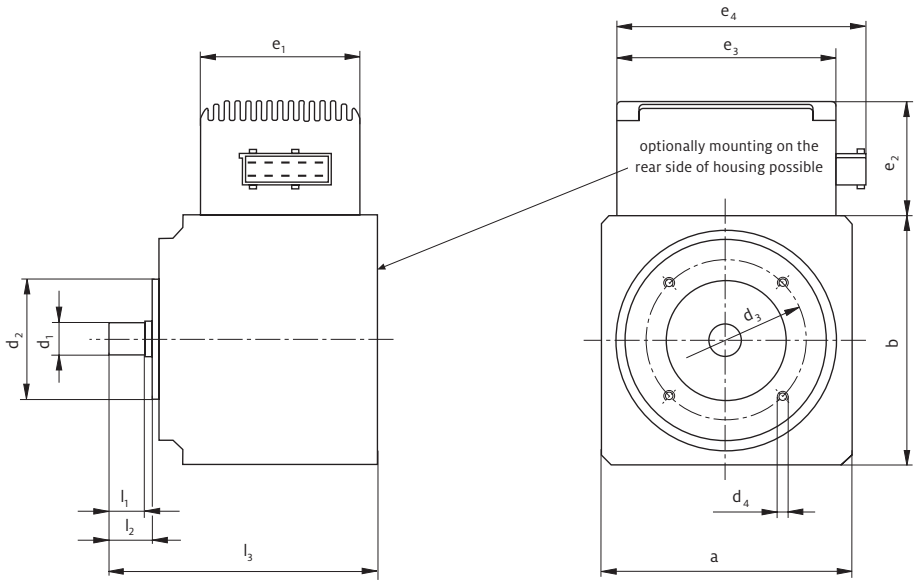

Measurements of standard design

Dimensions in mm	Symbol	MF35.1	MF56.1	MF63.1
Width	a	82	102	125
Height electronics	b	82	102	125
Output shaft diameter	$d1_{j6}$	11	14	16
Output flange, Outer dimension	$d2_{h6}$	40	50	60
Pitch circle Fixing	d3	55	65	80
Drills fixing	d4	M5	M5	M5
Groove dimension	l1	16	18	18
Output shaft length	l2	20	25	25
Length, complete	l3	95	116	140
Width electronics	e1	80	80	80
Height electronics	e2	56	56	56
Length electronics without connector	e3	108	108	108
Length electronics with connector	e4	125	125	125

	Size	MF 35.1	MF 56.1	MF 63.1
Performance features	With integrated gearbox	i = 80:1	i = 80:1	i = 80:1
	Output speed n_N (U/min)	37	37	37
	Output speed range (U/min)	3 to 40	3 to 40	3 to 40
	Rated power P_N [1] (W)	10	26	45
	Rated torque M_N [3] (Nm)	12	25	40
	Maximal torque M_{MAX} (Nm)	25	50	100
	Holding torque, static (currentless) (Nm)	> 10 Nm	> 10 Nm	> 10 Nm
	Positioning accuracy [4]	0.3° – 0.8° (< 1° at max. torque)		
Electrical features	power suply (V)	48 DC (optional 24 DC)		
	rated power supply I_N (A)	on request	on request	10
	max. power supply I_{MAX}(A)	on request	on request	32
	fuse protection (extern):	on request	on request	15A
	rated curent – characteristics	on request	on request	15A
	supply electronics (V)	24 DC	24 DC	24 DC
	power input [2] typical (mA)	300	300	300
Weight	(kg)			4.9

1) With operation mode S1, 2) Standard, 3) With operation mode S2 – 5 minutes, 4) With Hall generator and without additional encodes

Feature		Remark
Surrounding temperature	0°C to +40°C	storage: -15°C bis +70°C
Protection class	IP 54 optional: IP 67	
Cooling	natural convection	
Electrical connection	AMP Junior Timer 1-963215-1 optional: Phoenix PLUSCON-VARICON	
Wire set	converted wire sets for single drives and bus networks	please see accessories
Shaft design	without groove optional: mith groove hollow shaft with internal toothing	
Encoder	Hall generator optional: additional absolut encoder	
Controller	digital	
Operation modes	- rotation speed control - torque control - posizion control (absolute, relative)	
Technology functions	on request	
Configurations	with serial interface RS232 with field bus	
Driving programms	64 driving programms	A driving programm includes operation mode, nominal values and limit values.
Digital inputs	10	Because of multiple using, not all signals can be used parallel.
Digital outputs	3	Because of multiple using, not all signals can be used parallel.
Analogue inputs	2 (±10 V, 12 Bit, differentiell)	Because of multiple using, not all signals can be used parallel.
Analogue outputs	1 (0...10 V, 8 Bit)	
Field bus	CANopen optional: Profibus DP, EtherCAT	
Function block for SPS	miscellaneous function blocks on request	
Status	status register error memory	displayed over operating program, field bus or digital outputs